Draft Project Proposal on Rainwater Harvesting at NIT Campus

By
The Civil Engineering Department
Narula Institute of Technology

Content

Figures

Preamble

It is high time now to fall for surface water usage instead of going for ground water resources to meet human demand on needs. Considered the main source of surface water, rainwater is deemed more or less as fresh; the cost of collecting rainwater too is very low. Rivers and canals, lakes and wetlands, ponds and drywells – all are potential catchments to hold direct rainwater and its indirect source, the run-off storm water. The closed tanks also doubly work as settlement tanks to innately clearing the contaminated water to some extent. Pebbles, gravels, sand and charcoal – all available in abundance – work great as natural filter for cleaning the rainwater before usage. Hence keeping an eye on the rapidly increasing day-to-day demand for water among fast growing human population, there lies a great opportunity to harvest rainwater to meet a potential scarcity and avoid destruction of the normal groundwater table level. The boon of rainwater harvesting is – the unused or extra water which remains after using by the human settlements – it can be send down the aquifer to charge the groundwater level too.

Sketch Map of site at NIT Campus

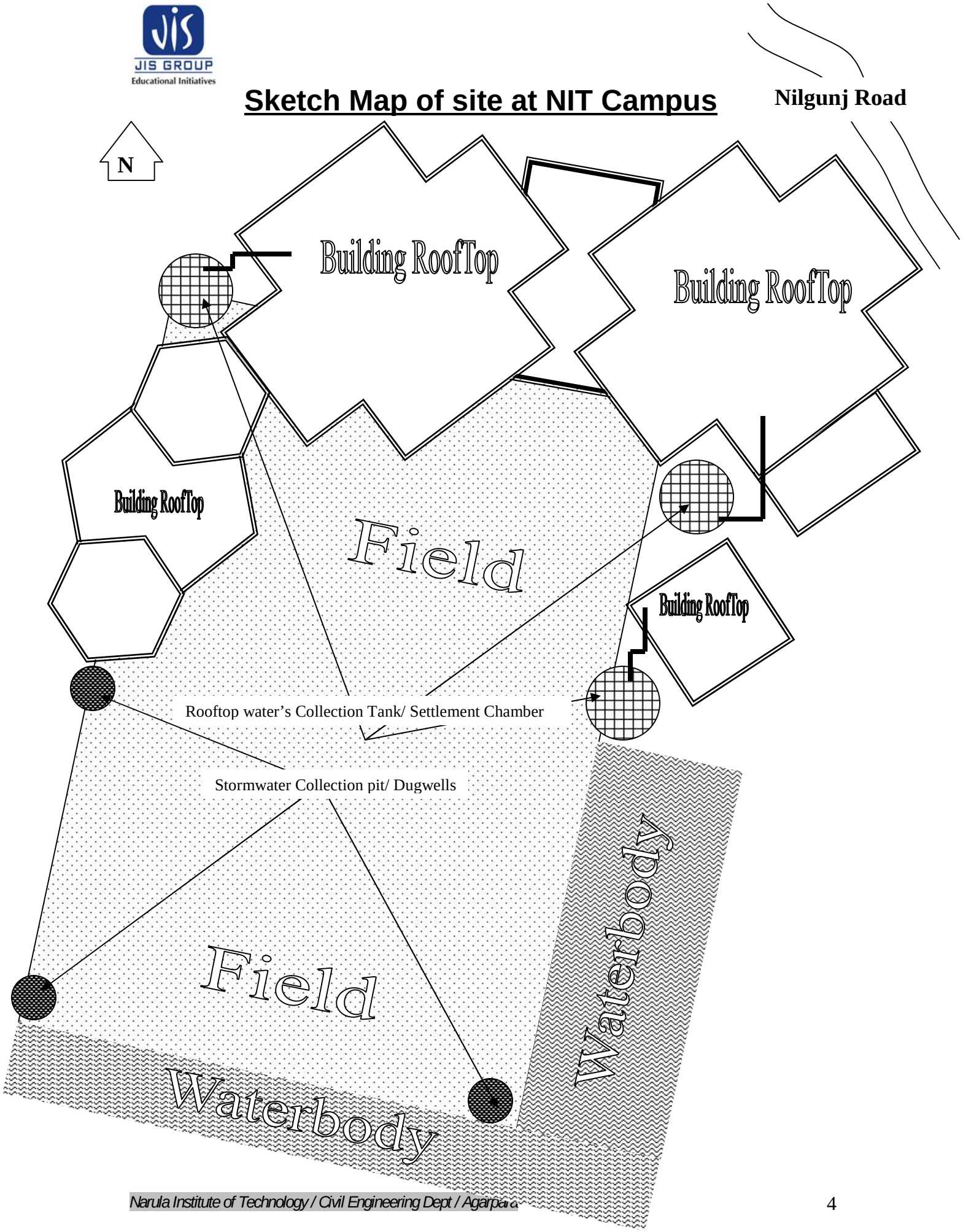

RAINWATER HARVESTING SYSTEM SCHEMATIC

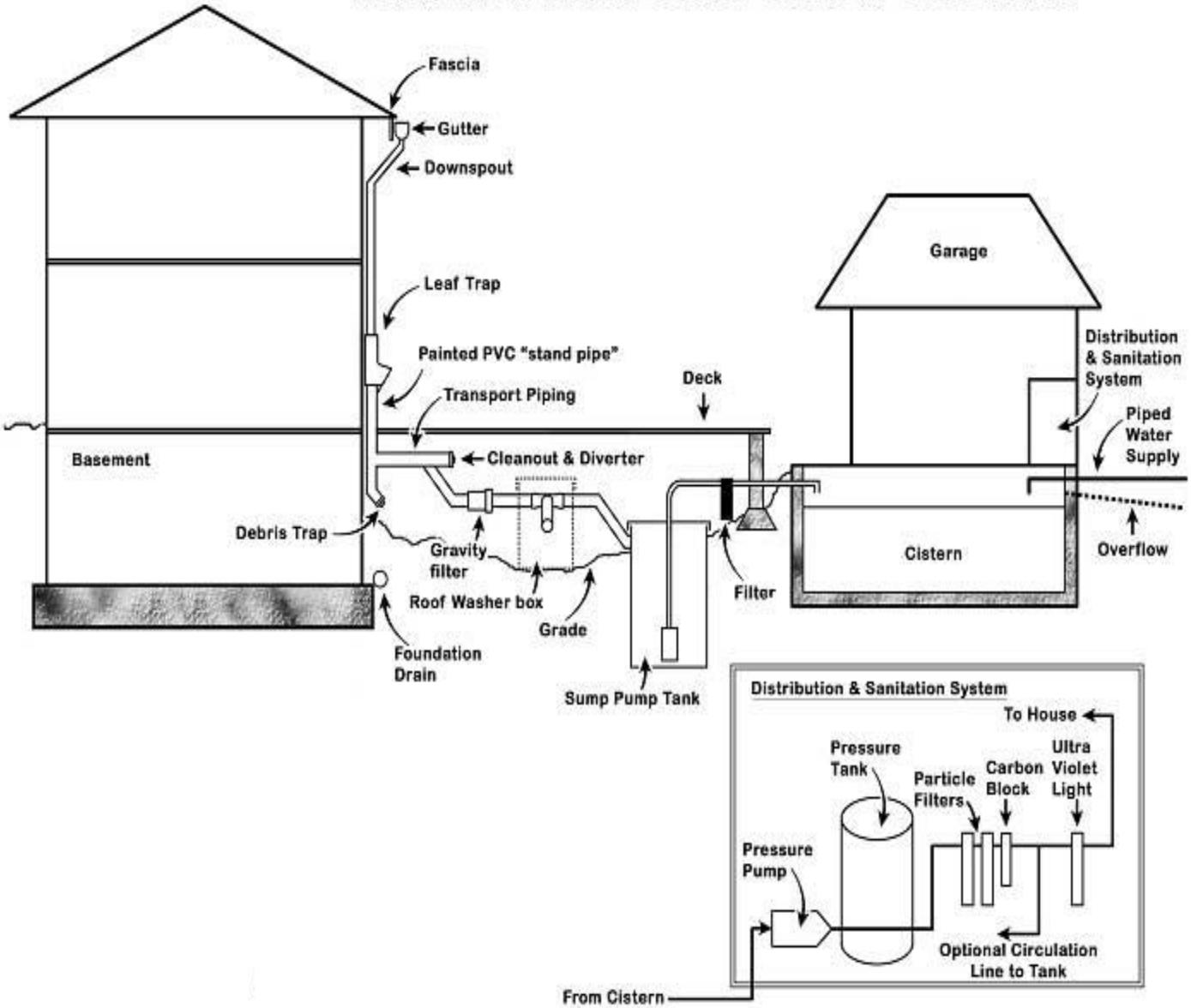

Chapter I: Introduction

Rainwater harvesting is an important environment friendly approach – dubbed as a Green Practice which has double benefit in both keeping the groundwater table undisturbed and charging the aquifer. Such a green practice encouraged in form of Community Development Program can find its popularity when it shows the manifold benefits of, in one hand, bringing people together to collective thinking on 'green' approaches, innovating approaches to save earth by harping on their creative notes, achieving nobler feelings saving water for future; on the other hand, rainwater as well as run-off storm water stored in a planned way save the earth from soil erosion, flood; recharge the aquifers to give a shot in the arm to the decreasing groundwater table.

The increasing urbanization lead to concentrated population density at places resulting into uneven drawing of ground water. This is ensuing into draught and drying up of river beds at places where domestic and industrial use of water is rising. This places if shift focus towards using rainwater, the groundwater there may gradually fall back to its normal level thus ensuring the eco-balance not lost. The extensive and unplanned usage of groundwater not only disturbed the natural water table but also has made the groundwater contaminated and, in many a place, totally unfit for any use. The groundwater in these places required to be immediately left to revive. Collecting rainwater, harvesting the storm water run-offs, in these places, surly would minimize the risk of the future population here.

Rainwater harvesting, besides being eco-friendly, is an economic practice as well. The cost of digging a catchment area even can be saved by roof-top collection of rainwater. The freshwater canals or rain-fed natural ponds too can be used for harvesting. Sand-gravel filters for purifying rainwater is again something which can be easily arranged. The catchments and settlement tanks built in the area easily free the spot and the vicinity from the curse of flood or water logging, thus saving money of pumping out dirty muddy storm water. Presence of water body in the region also reduces the ground heat and act as a natural cooler.

The best part of the practice of rainwater harvesting, however, is that in one hand it is checking one from leaning towards using groundwater as rainwater is obtained in abundance in many countries; on the other hand, if remains unused or extra, these rainwater, collected in say natural ponds or even in artificial tanks can pour back to the ground thus charging the natural aquifer to boost the groundwater level.

Chap II: Objective of Project Proposal

- To aid towards the greater objective of water management and conservation and to increasing recharge of groundwater by capturing and storing rainwater, rainwater harvesting from rooftop run-offs and natural waterbodies augment the community development.

- As such, this is a step towards a potential alternative arrangement against poor maintenance and monitoring of a centralized piped ground water supply.

- To use surface water instead of groundwater in daily works like washing, wateringland like irrigation and gardening, cooking and canteen cores, it is required to build storing tank to directly collect rainwater and construct pits to collect rooftop run-offs and water from stormwater drains etc. and then after proper filtering in settlement tanks and filtration chamber, use the water in daily works.

- To minimize cost of draining storm water, get rid-off water logging in the vicinity and put into use all the waterbodies in and around the campus for some good purpose.

- To attract the notice of the state and administration on good practices those are environment friendly and help to eradicate pollution and possible green-house effects.

Chap III: Need for rainwater harvesting

Reasons for rainwater harvesting: Why

1 Increasing water needs/demands

- The rapid rise in human population has made optimum use of fresh water imperative.
- Urban water supply systems in particular are under tremendous pressure to meet the needs of the population as well as industry and large-scale construction.
- The increased need for water results in lower groundwater tables and depleted reservoirs. Many piped water supply systems fail.
- Consumption of polluted water is beset with health hazards.
- The use of rainwater is a useful alternative

2 Variations in water availability

- The availability of water from sources such as lakes, rivers and shallow groundwater can fluctuate strongly.
- Unchecked rainwater runoff is causing soil erosion.
- Collecting and storing rainwater can provide water for domestic use in periods of water shortage.
- Rainwater may also provide a solution when the water quality is low or varies during the rainy season in rivers and other surface water resources (for example in Bangladesh).

3 Responsibilities towards protecting Nature

- Using more of rainwater helps to conserve & augment the storage of ground water
- It helps to arrest sea water intrusion in coastal areas
- It helps to avoid flood & water stagnation in urban areas
- Reduces water and electricity bills

4 Advantage of collection and storage near the place of use

- Traditional sources are located at some distance from the community. Collecting and storing water close to households improves the accessibility and convenience of water supplies and has a positive impact on health.
- It costs less to collect rainwater than to exploit groundwater.
- Only traditional knowledge, skills and materials can be used to collect the water and no government technical assistance is required for repair and maintenance.
- Collecting rainwater is the only way of recharging water sources and revitalising dry open wells and dry hand pumps.
- It can also strengthen a sense of ownership. It gives an opportunity for communities to come together and work closer. It allows for the decentralised control and community management of water.
- It will provide productive employment to the rural poor in their own villages.

5 Quality of water supplies

- Water supplies can become polluted either through industrial or human wastes or by intrusion of minerals such as arsenic, salt (coastal area) or fluoride.
- Rainwater is the ultimate fresh water.
- Rainwater is generally of good quality.

Reasons for rainwater harvesting: When

- Rain water harvesting measures are essential when the ground water is brackish or has a high Iron or Flouride content.
- Rain water harvesting measures should begin four months before the monsoon is to arrive.
- Concentrated water demand in urban areas for various purposes like household, institutions (e.g. schools and colleges, hospitals, offices, markets and shopping malls), factories, and even water parks

Typical Rainwater collection and Purification System drawing

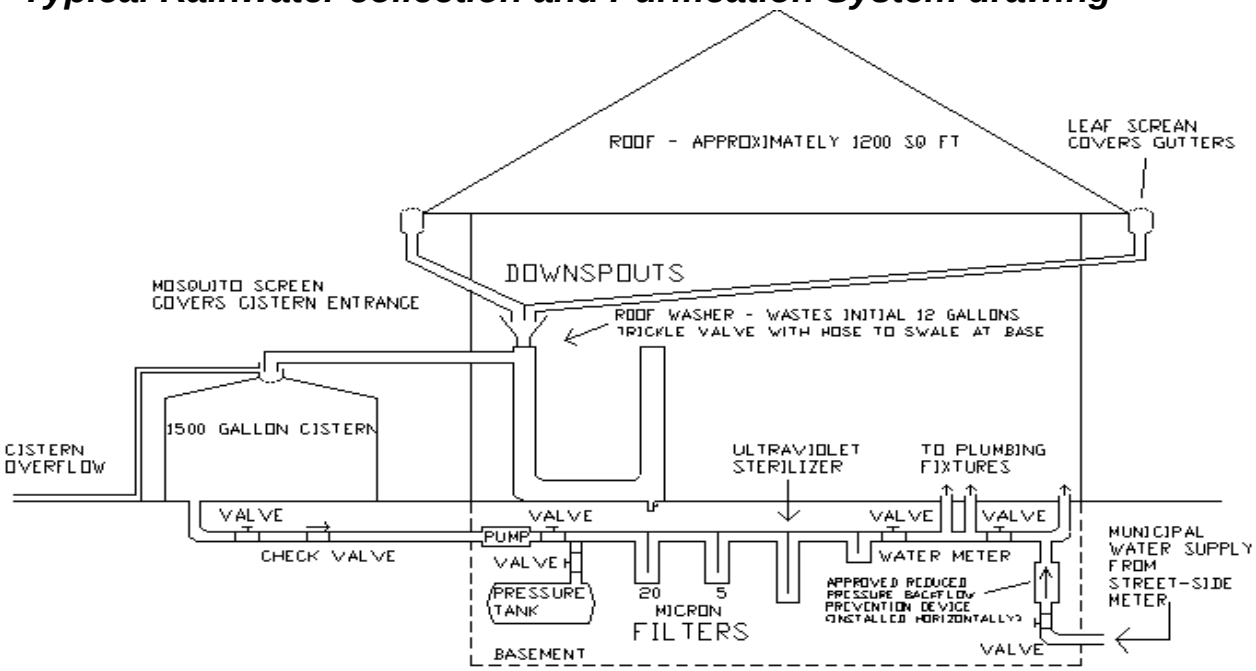

Advantages and Disadvantages

Simple construction: Construction of RWH systems is simple and local people can easily be trained to build these themselves. This reduces costs and encourages more participation, ownership and sustainability at community level.	**High investment costs**: The cost of rain-water catchment systems is almost fully incurred during initial construction. Costs can be reduced by simple construction and the use of local materials.
Good Maintenance: Operation and maintenance of a household catchment system are controlled solely by the tank owner's family. As such, this is a good alternative to poor maintenance and monitoring of a centralised piped water supply.	**Usage and maintenance**: Proper operation and regular maintenance is a very important factor that is often neglected. Regular inspection, cleaning, and occasional repairs are essential for the success of a system.
Relatively good water quality: Rainwater is better than other available or traditional sources (groundwater may be unusable due to fluoride, salinity or arsenic).	**Water quality is vulnerable**: Rainwater quality may be affected by air pollution, animal or bird droppings, insects, dirt and organic matter.
Low environmental impact: Rainwater is a renewable resource and no damage is done to the environment.	**Supply is sensitive to droughts:** Occurrence of long dry spells and droughts can cause water supply problems.
Convenience at household level: It provides water at the point of consumption.	**Limited supply**: The supply is limited by the amount of rainfall and the size of the catchment area and storage reservoir.
Not affected by local geology or topography: Rainwater collection always provides an alternative wherever rain falls.	
Flexibility and adaptability of systems to suit local circumstances and budgets, including the increased availability of low-cost tanks (e.g. made of Ferro cement, plastics or stone/bricks).	

Chap IV: Defining the Process of Rainwater harvesting

Rainwater harvesting is a technology used to collect, convey and store rain for later usage
It involves direct collection and storage of the run-off rainwater for direct use in future.
The different usage of harvested rainwater can be for domestic purposes like cooking, washing and bathing and agriculture purposes like watering land, feeding cattle etc.
It also can be artificially recharged into the ground which is the natural aquifer
Rainwater Harvesting is the way to support Eco-system and Human well-being.

One typical roof-top rainwater harvesting system consists of three basic components:

1. Catchments or roof surface to collect rainwater
2. Delivery system to transport the water from the roof to the storage reservoir (gutters and drainpipes)
3. Storage reservoir or tank to store the water until it is used. The storage reservoir has an extraction device that- depending on the location of the tank- may be a tap, rope and bucket, or a pump.

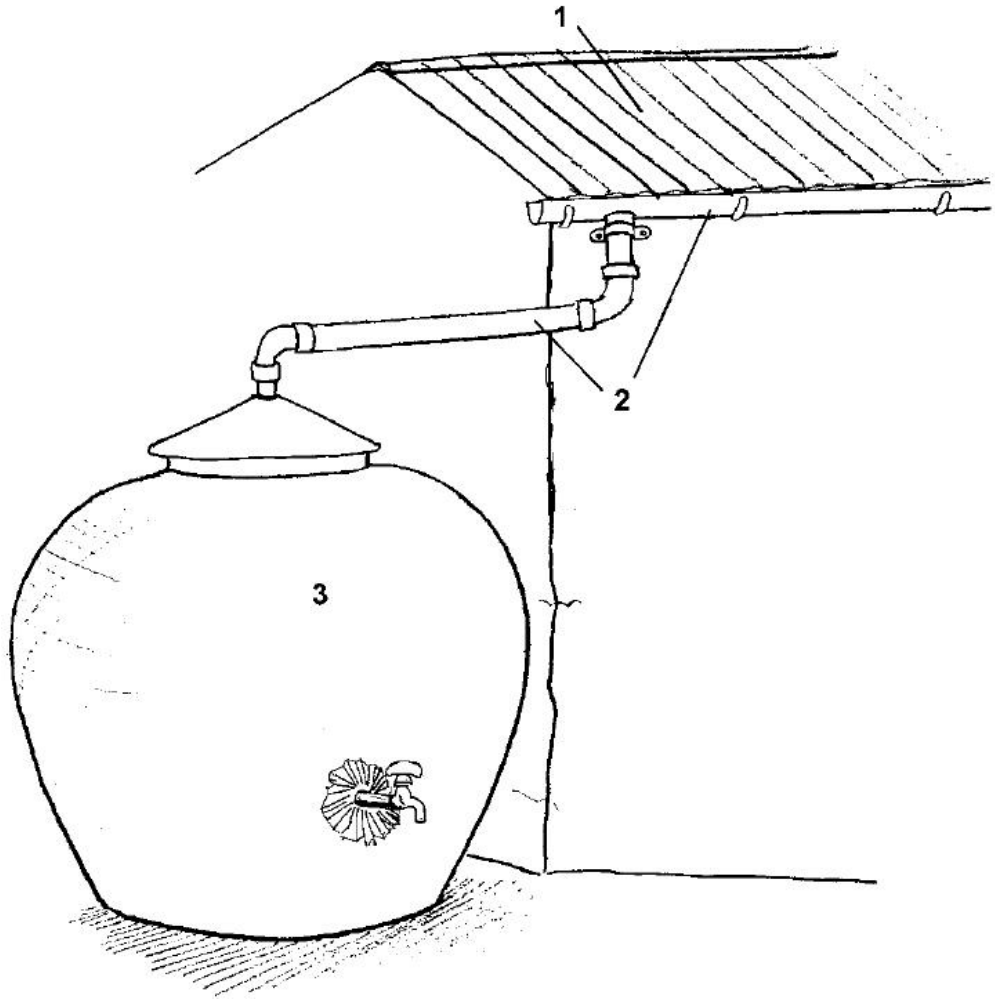

Three basic components - catchment (1), delivery system (2), storage reservoir (3)

Pre-conditions for rainwater harvesting

The construction of a Rain-Water-Harvesting system is determined by several critical technical factors:

- ☐ Use of impermeable roofing material such as iron sheets, tiles, asbestos-cement
- ☐ Availability of an area of at least 1 m^2 near each house for constructing a storage tank
- ☐ Water consumption rate (number of users and types of uses) and storage capacity required
- ☐ Availability of other water sources, either ground water or surface water that can be used when stored rainwater runs out
- ☐ Availability of labourers with technical building skills in or nearby the community
- ☐ Availability of required, suitable local construction material and labour

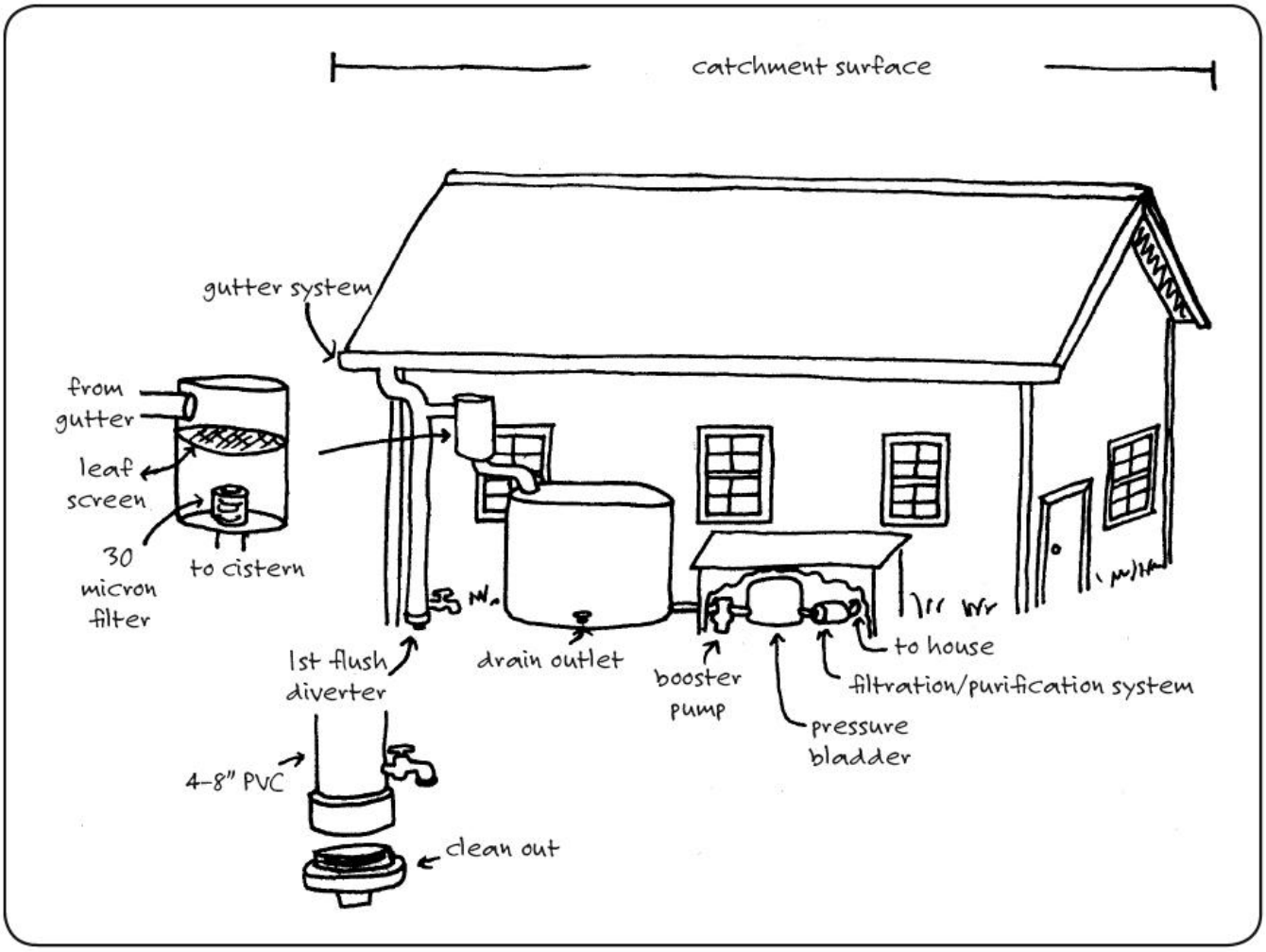

FIG. 8.2. **Typical components of a whole-house rainwater harvesting system.**

Typical details for Rain harvesting tanks and systems connected to a single storey villa

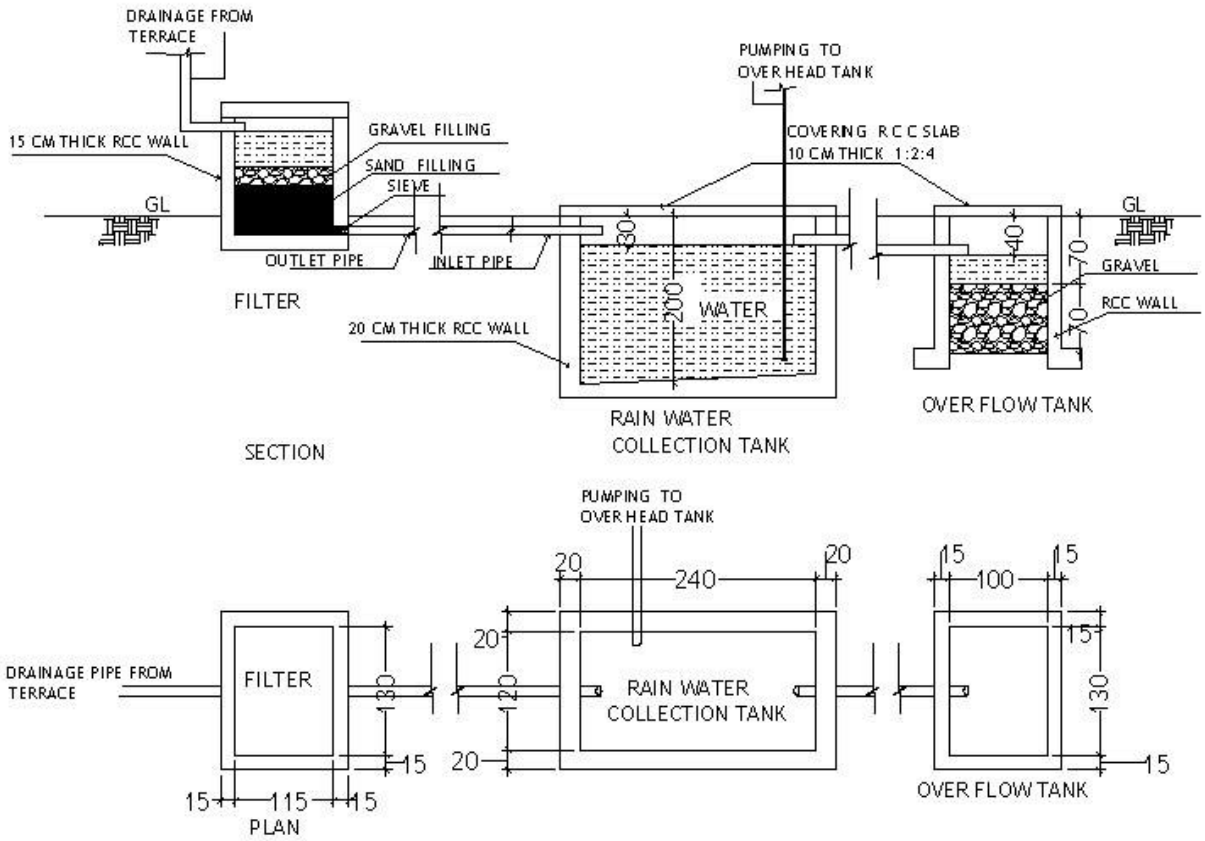

Typical First Flush Collection Pit

Typical Side Entry Pit For Storm Water

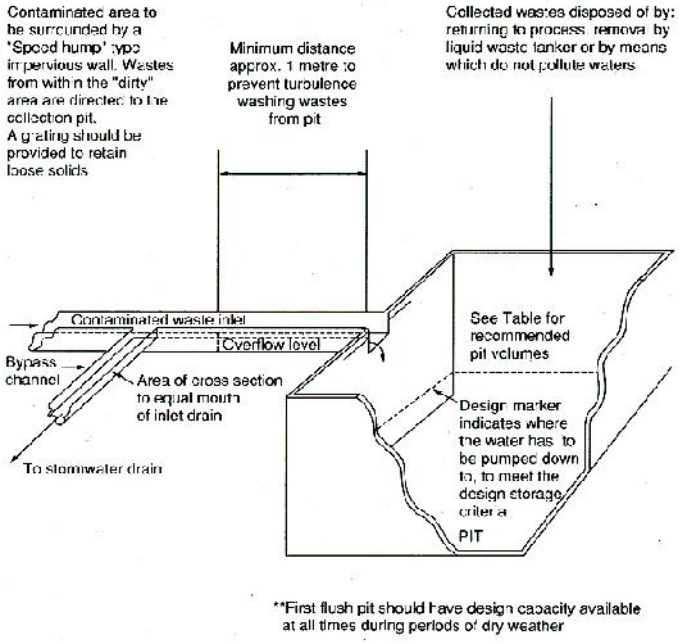

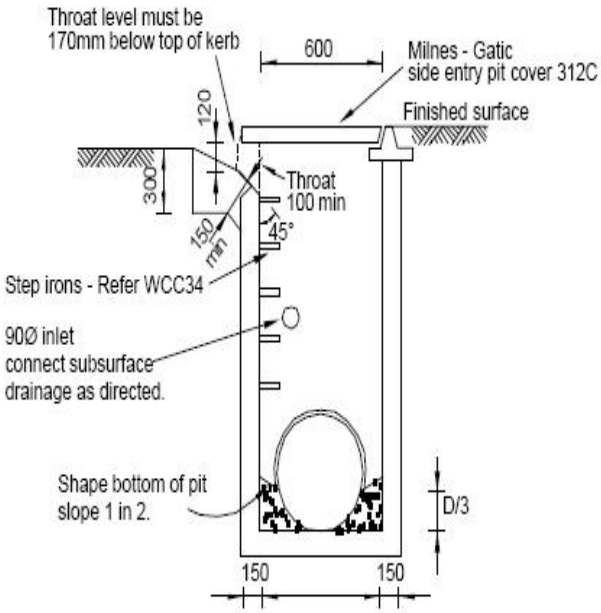

Typical Designs of Storage Reservoir

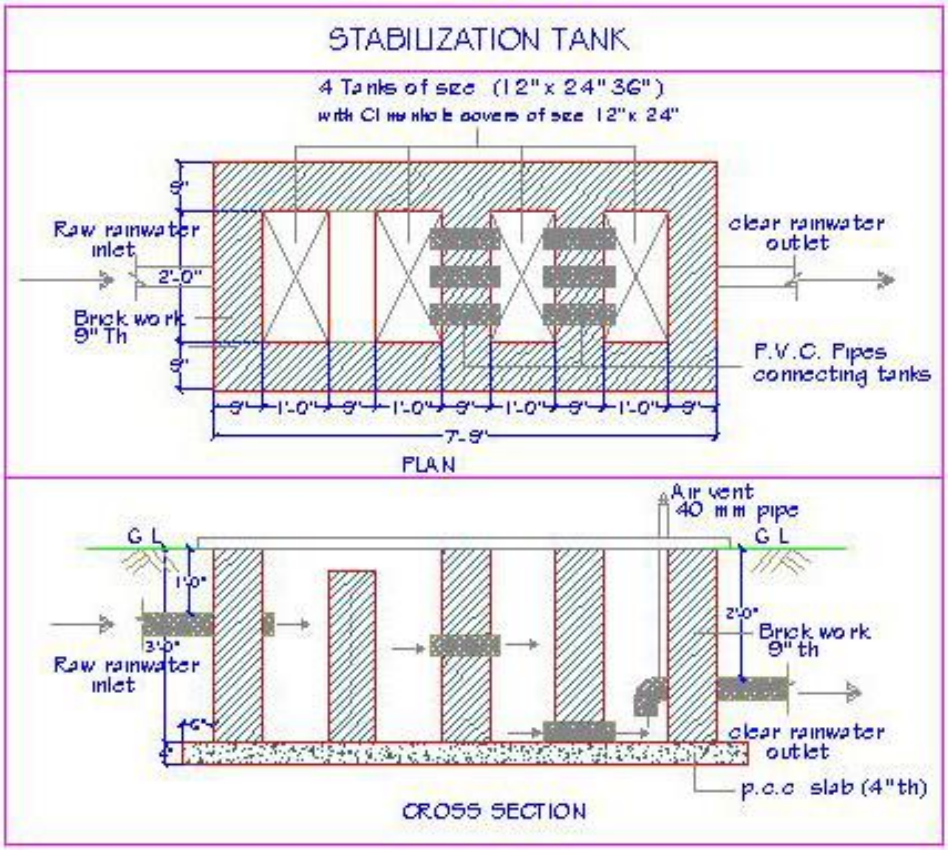

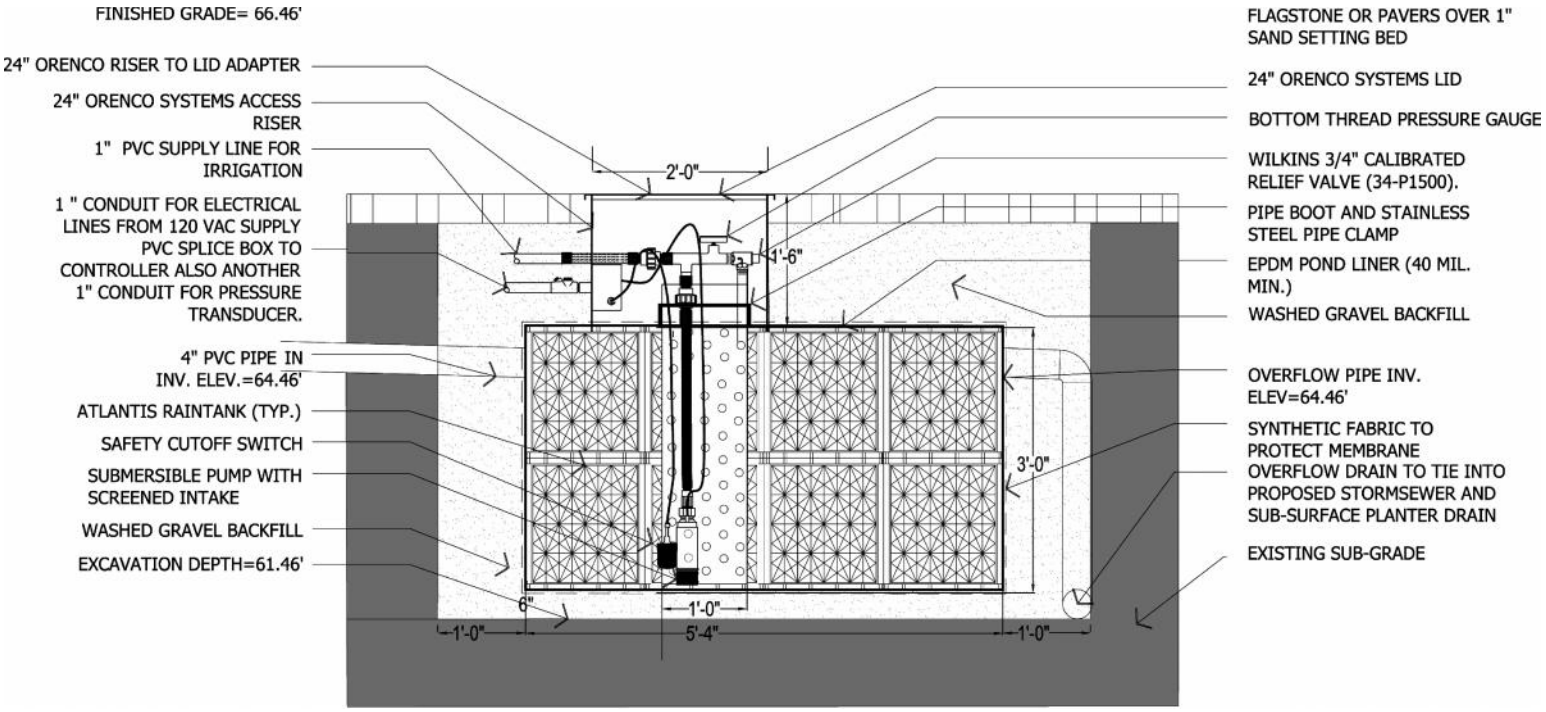

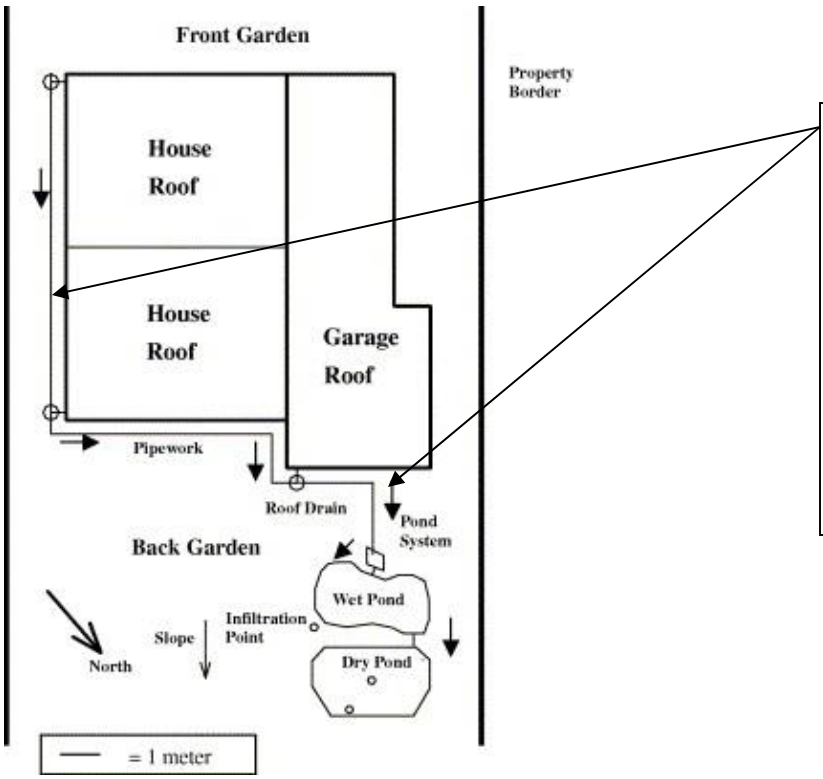

Typical **Rainwater flow layout** from getting collected at the "House Roof / Garage Roof" and then through "Pipework" and "Roof Drain" to the "Pond System" of "Wet Pond" and "Dry Pond" at the strategically sloped "Back Garden" where it stored for future usage.

Typical Rainwater pipeline goods

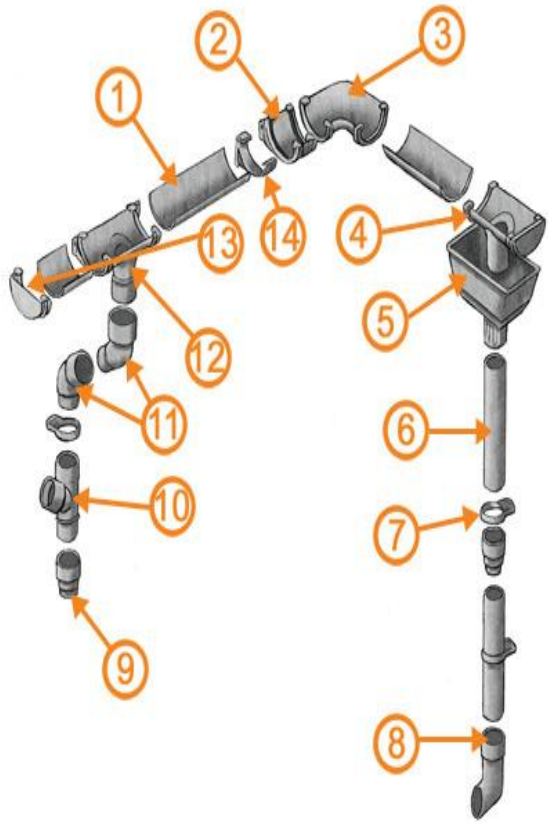

1. Gutter: Available in up to 3m lengths, the guttering must slope gently downwards at least 12mm every 3m towards the RUNNING OUTLET in order to provide effective drainage. It should be fixed at 1m intervals with a GUTTER SUPPORT BRACKET.
2. Gutter Union Bracket: Connects two GUTTER pieces; some guttering ranges have joints ready incorporated in the design.
3. 90° Gutter Angle: Allows a run of guttering to continue around a corner. A GUTTER SUPPORT BRACKET must be fixed within 150mm on both sides of the angle.
4. Stop End Outlet: Sits at the end of a run of guttering to close the pipeline, and lets water out by connecting to the DOWNPIPE. Usually supplied as a 'right' or 'left end', depending on the layout.
5. Hopper: Funnel-shaped rainwater collector that diverts to a DOWNPIPE. Elaborate cast iron and lead versions are of great signifi cance on many façades of historical buildings. On some old houses, hoppers took out grey water, but this is not permitted now.
6. Downpipe: Available in lengths up to 2.5m, it lets water run down to the SHOE. Fixed to the wall with a DOWNPIPE BRACKET.
7. Downpipe Bracket: Secures a DOWNPIPE to the wall —there should be one positioned near the top of the first pipe and then around every metre after that. Two sorts are generally available: the saddle bracket and the barrel clip (shown). The saddle bracket just holds the pipe away from the wall while the barrel clip gives a firmer grip to the pipe and prevents it moving up and down.
8. Shoe: Fitted at the base of the DOWNPIPE to change the direction of the flow of water, discharging it horizontally, clear of the wall, into a drain or hardstanding —which it should be positioned around 40mm above. Cast iron shoes may be decoratively branded with dates or crests.
9. Downpipe Connector: Allows more than one DOWNPIPE to be connected in series. Cast iron connectors are sometimes decoratively branded. Plastic downpipes may, however, just join by sitting the upper pipe inside the lower, without connectors, which creates a watertight seal.
10. Branch: Single branch for joining two DOWNPIPES together, to divert the water from another roof section into the same drain.
11. Offset Bends: At either a 112.5° (as here) or 92.5° angle, these bends bring the DOWNPIPE close to the wall, ensuring water runs vertically, thus reducing debris build up.
12. Running Outlet: Provides an outlet to the DOWNPIPE for rainwater along the length of guttering. Unlike a STOP END OUTLET, it connects to a guttering run at both ends.
13. External Stop End: Closes off a run of guttering.
14. Gutter Support Bracket: Attaches the guttering to the facia at 1m intervals.

Chap V: Success stories of Rainwater harvesting in India

- Bangalore developed a master plan for rainwater harvesting for its Comprehensive Development Plan area for 1279 square Kilometre. The report suggested that upto 25% of the city's requirement by 2011 could be met through rainwater harvesting and in the optimistic scenario that 592.90 million litres per day equivalent could be harvested in the city. The Karnataka Watershed Development Project (KAWAD) is addressing the water scarcity and is now trying out different institutional mechanisms to identify the appropriate approach for resolving water use conflicts.
- Chennai has made rainwater harvesting compulsory for all building in the city, both old and new, and claims that 98% of the buildings have complied with the requirements which seek to wither store rainwater or to recharge it to the underground aquifer.
- Action for Social Advancement (ASA), nongovernmental organization based in Madhya Pradesh, worked with 42 tribal villages (nearly 25,000 people) with a land area of nearly 20,000 hectares in Jobat, one of the sub-districts of Jhabua district in Madhya Pradesh, and carried out watershed work at the small river basin level. They focused on Land development, Water resources development, Agriculture intensification and diversification, as well as tried building and promoting people's institutions around the natural resource interventions. As a result, the subsurface flow of water has improved significantly, indicated by the increased flows in the streams and rivers in the entire basin. Hand pumps and dug wells have become permanent, while many of the dry dugwells have been revived. Evidence of increased base flow can be confirmed by the fact that in last three years private investments have been directed towards shallow dug-wells.
- Sukhomajri is a small hamlet (59 families in the 1975, and 89 in the 1990, census surveys) with average land holdings of 0.57 ha, located in the Shiwalik foothills, India. An integrated watershed development programme, with a major emphasis on rain water harvesting, was planned here. A six metre high earthen embankment pond with 1.8 ha-m storage to harvest rainwater from a 4.2 ha catchment was constructed in 1976. Crop yields were doubled as a result of the use of supplementary irrigation water and improved land management practises. Livestock water needs and domestic water requirements were satisfied for all the households.

Lessons learned by the **Sri Lanka Rain Water Harvesting Forum** –

- Awarness to Community and officials was improtant at the initial stage
- Establishment of policy is useful in obtaining official support
- Community contribution and involvement is important since this creates a sense of ownership
- Training on Operation and Maintenance of the system is important for long term use
- Education on health & hygiene to the comunity is important to ensure safe drinking water
- Improvment in technology > improved water quality > acceptability.
- Introduction of simple water treatment methods and water quality monitoring at HH level improved use for drinking

Rainwater Harvesting System

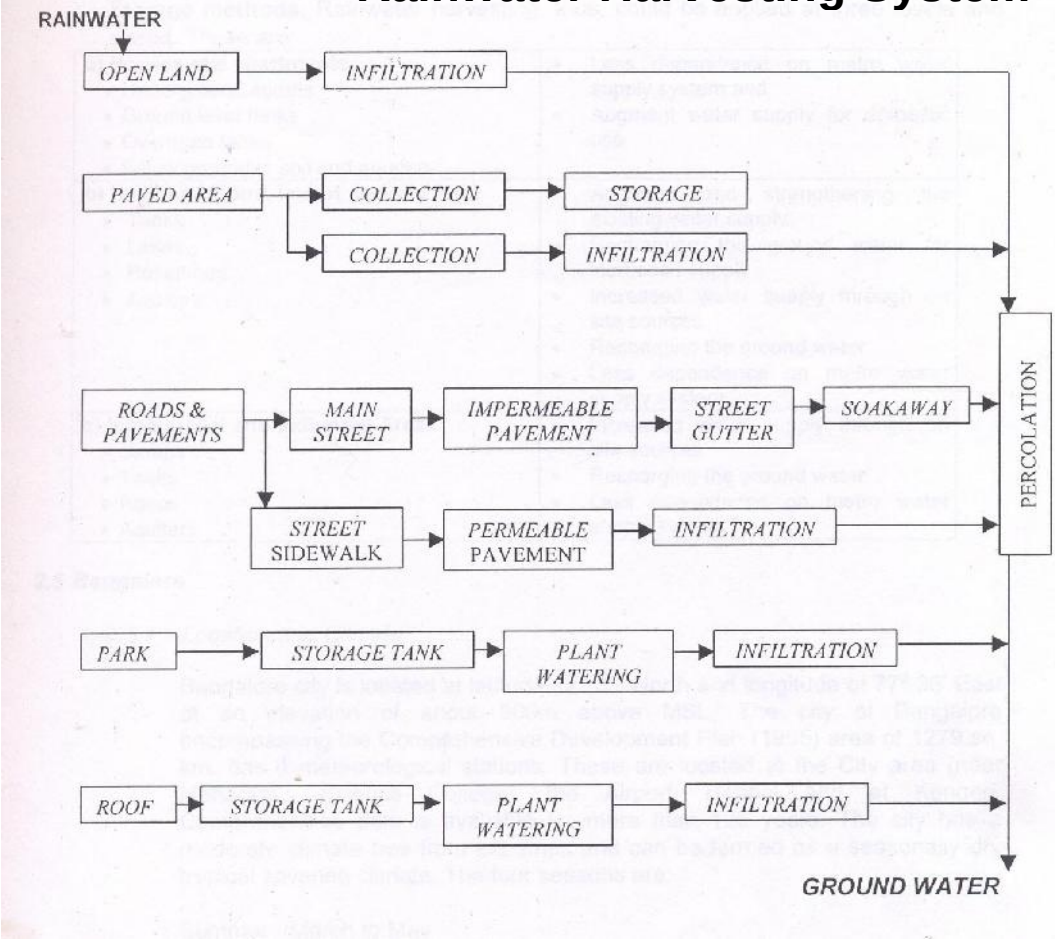

WATER RESOURCES PLANNING POLICY under NATIONAL WATER POLICY OF INDIA as developed in April 2002 - Non-conventional methods for utilisation of water such as through inter-basin transfers, artificial recharge of ground water and desalination of brackish or sea water as well as traditional water conservation practices like rainwater harvesting, including roof-top rainwater harvesting, need to be practiced to further increase the utilisable water resources. Promotion of frontier research and development, in a focused manner, for these techniques is necessary.

NATIONAL RAINWATER POLICY AND STRATEGIES OF SRILANKA as developed in June 2005 - In the light of increasing operational and maintenance costs to, rationalize investments ,both by Government and non Government sectors, in the field of pipe borne water supply, drainage, flood control, soil conservation etc, and promote the practice on a Regional Community and family basis, in order to ensure that the 'City of tomorrow' applies Rain water harvesting broadly ,by the control of water near its source, in its pursuance of becoming a 'Green city' in the future.

NATIONAL RAINWATER HARVESTING POLICY OF GRENADA (The Carribean) as developed in March 2006 has the objective – to promote adoption of RWH practices and mainstreaming strategies that facilitate its adoption within wider water sector policies and to strengthen the institutional and human resources capacities of the Carribean countries to use RWH